KAB XH2/T1

SPECIFICATION SHEET

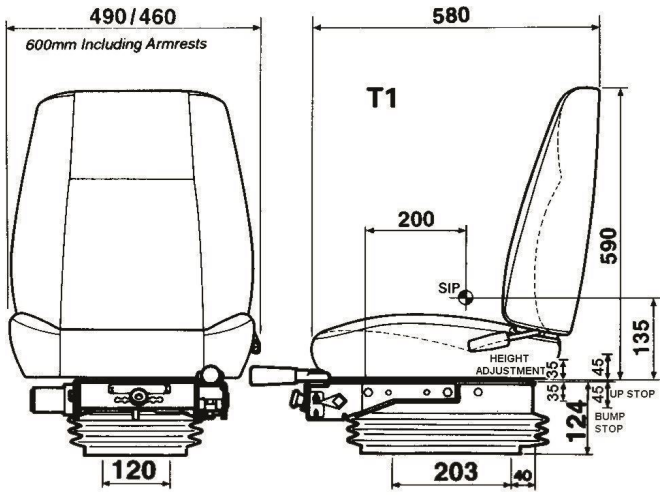

Standard Features:

- Mechanical suspension
- Medium-height reclining backrest
- 90-160mm vertical suspension stroke
- 70mm integral height adjustment
- 50-120kg weight adjustment
- Slide rail adjustment
- Lumbar support
- Headrest
- EEC type approved classes I/II/III
- Black fabric

Options:

- Seat belt
- Adjustable armrests
- 180 degree turntable

Unit 1, Forward Park, Sheene Road, Leicester,
LE4 1BF, United Kingdom
Tel: +44 (0)116 216 9910
Web: www.capitalseating.co.uk
Email: sales@capitalseating.co.uk